Beverage Craft
Beer Equipment & Parts

SCHÄFER CONTAINER SYSTEMS

Stainless Eco Keg 20L

Special Features

- Lightweight
- Highly Customizable
- Sound Dampening
- Stackable
- 304 Stainless Steel & Polypropylene Chimes
- Easy Maintenance
- Sankey D Valve



SIZE/VOLUME	HEIGHT(IN)	DIAMETER (IN)	WEIGHT(LBS)
20L	22.05	9.41	8.16

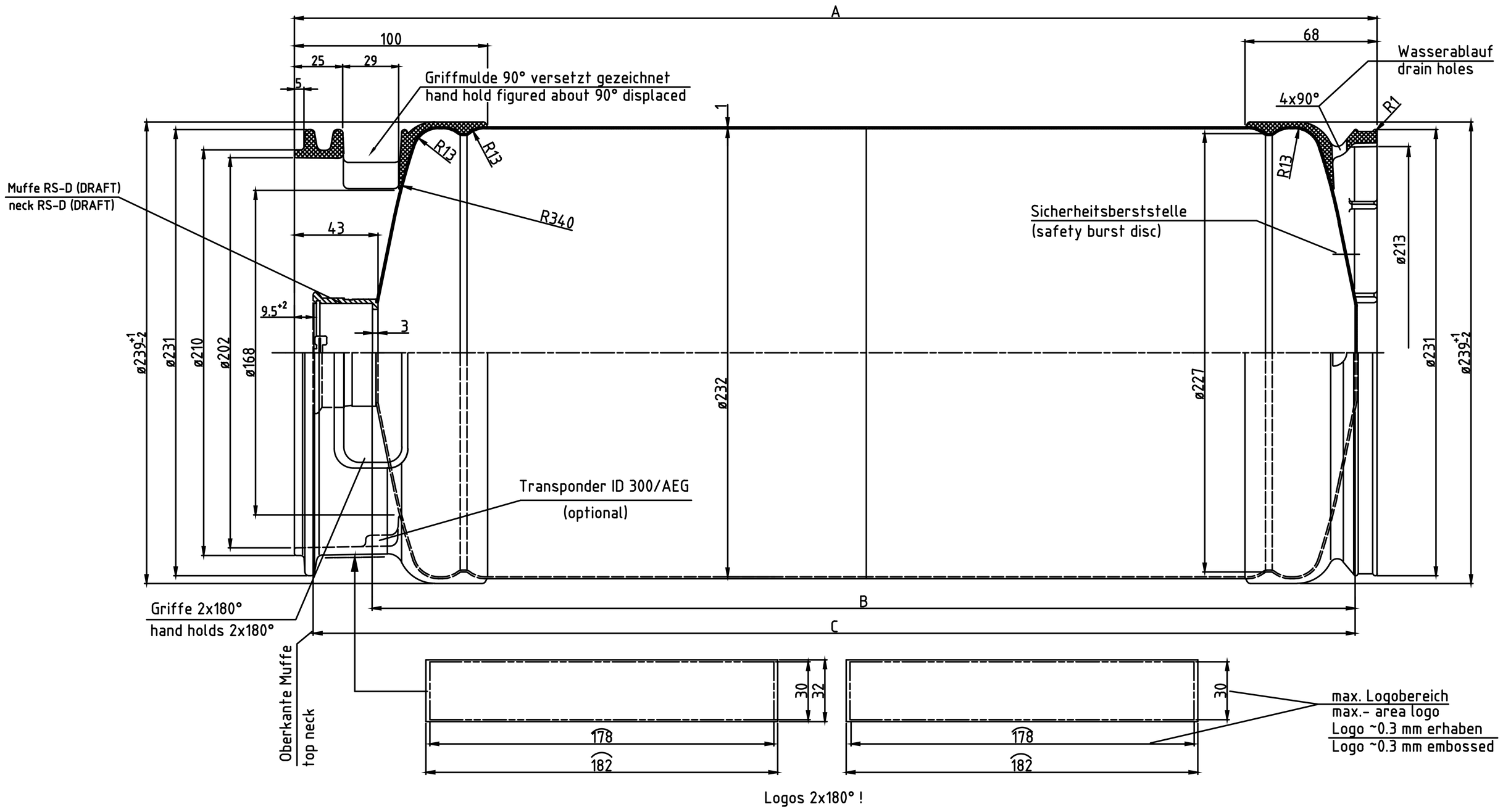

TOLL FREE: (866) 590 92 99

SALES@BEVERAGECRAFT.COM