BEVERAGE CRAFT Beer Equipment & Parts

FLASH CHILLER
KALINKA 2

Specifications



Internal number	107.00.000.00-XX
Part number	KF-1/6T2
Capacity, BTU/h, evap 20 °F	908
Glycol tank capacity, gal	2
Compressor power, hp	1/6
Dedicated circuit, amp	15
Plug type (NEMA #)	5-15P
Voltage, V / frequency, Hz	115 / 60
Operating amperage, A	4.2
Refrigerant	R290
Outlet temperature, °F	32÷46
Operating ambient temperature, °F	60-90
Product lines (st. steel AISI 304)	4
OD product lines, in	5/16
Coil's length, ft	35
	31
Width, in	17
Depth, in	18
Height, in	13
Weight gross/net, lb	56 / 49
Power cord length, ft	6
Inlet/Outlet barb, in	3/8
Operating ambient temperature, °F	60-90
Clearance at least	12" around the entire unit
Glycol mixture, vol%	40 % glycol and 60% water

FLASH CHILLER
KALINKA 2

Overall dimensions

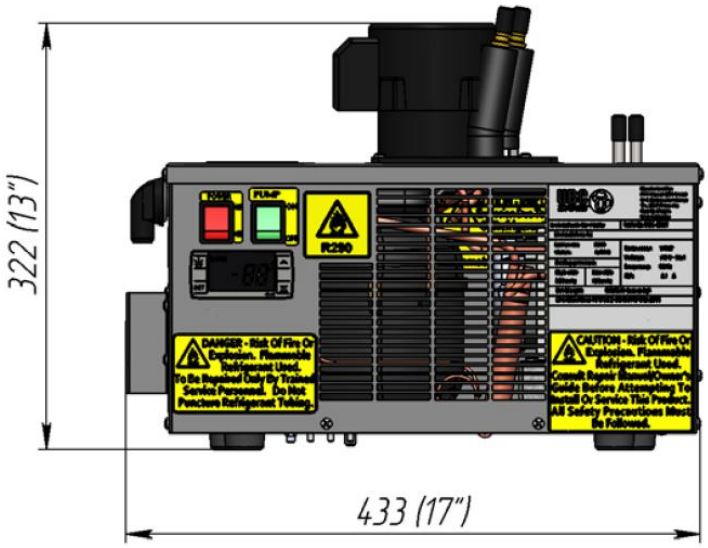

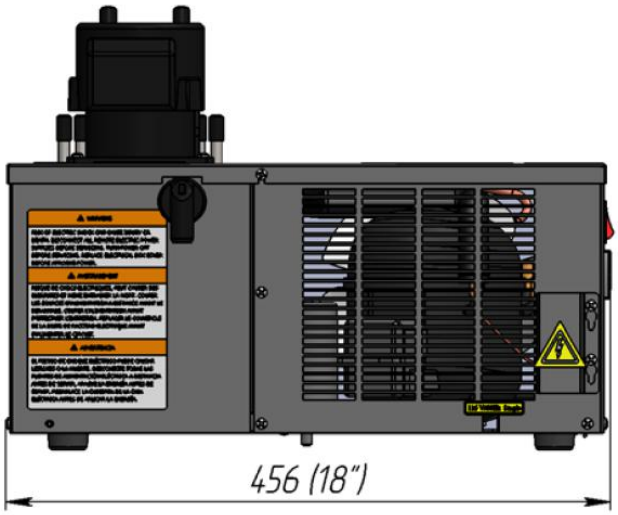

Wiring diagram

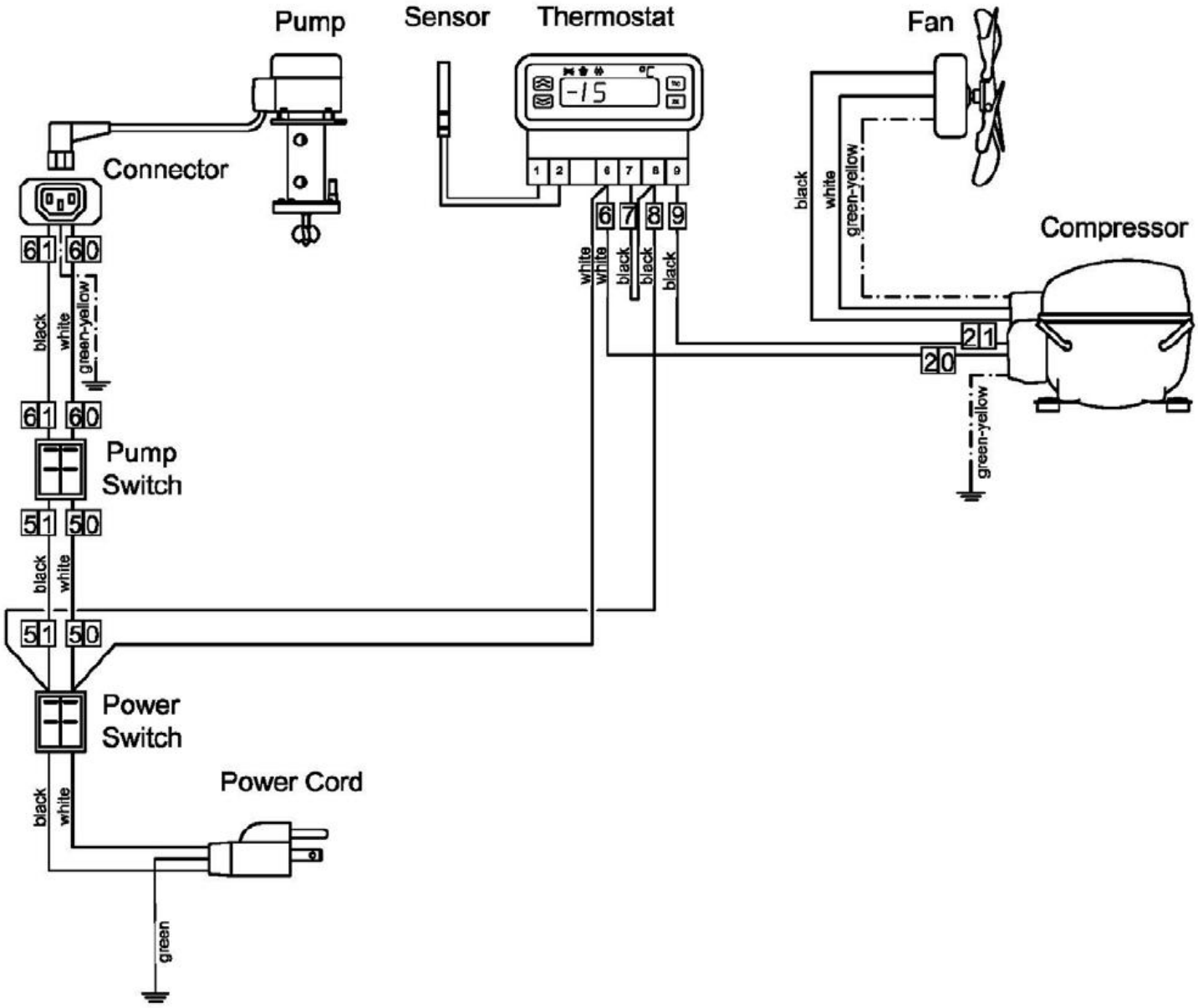

FLASH CHILLER
KALINKA 2

Parts

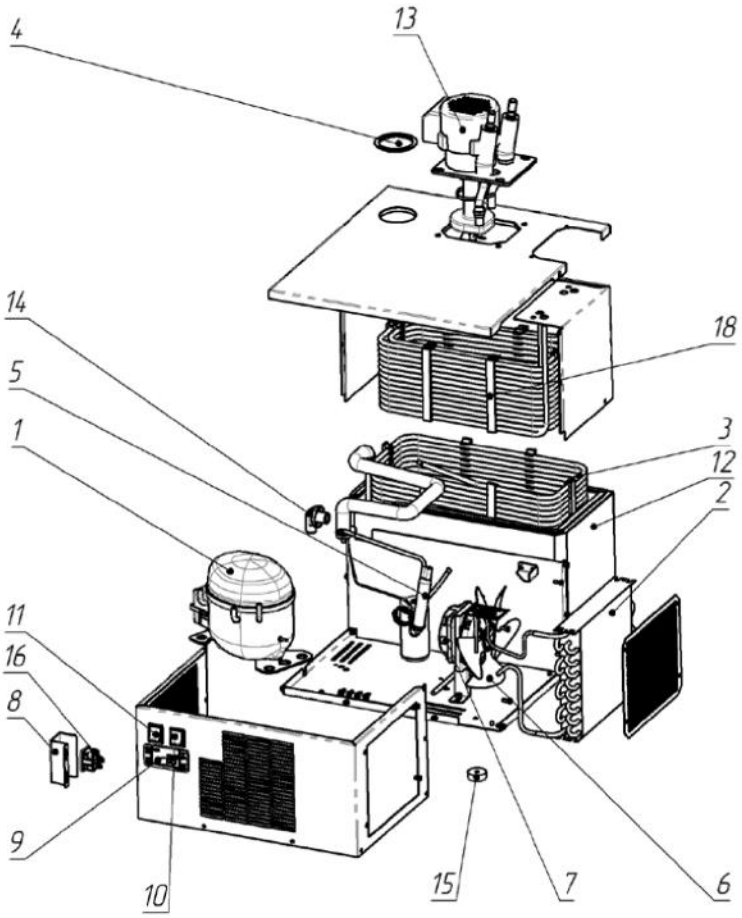

1	Compressor “EMBRACO” EMI 50UER (115-127 V/60Hz) or “CUBIGEL” NBC30NR (115V, 60Hz) or "SECOP" DLE4CN (115-127V/60Hz)
2	Air condenser “KARYER” STFT 12118
3	Evaporator
4	Cap
5	Filter-drier “DE.NA” GR-15 d6.1xd6.1xd2.1
6	Impeller “ELCO” Ø172 mm., $\alpha=28^0$
7	Electric motor or "ELCO" NU 4-13-2/236 115 V, 60/50 Hz or “WGMOTORS” YZF6-13-26 (6W) (120V-60Hz) or “EBM” iQC3612-010415/A01 (100-240V 50/60 Hz)
8	Protective casing
9	Thermostat “DIXELL” XR02CX-4N0F1 (115 V/ 60Hz) or "DANFOSS" ERC 111A
10	Power switch “ARCOLECTRIC” C6053ALBG (Green)
11	Power switch “ARCOLECTRIC” C6053ALBR (Red)
12	Glycol bath
13	Glycol pump “FLOJET” SPC 17/4, (115V/60Hz)
14	Overflow
15	Foot
16	Connector R302SN 250V 10A
17	Capillary tube 2.0x0.8 mm (variable length, 1700 or 3000 mm)
18	Coils