BEVERAGE CRAFT Beer Equipment & Parts

CARBONATED BEVERAGE COOLING

CarboMix6 Plus



DIMENSIONS:

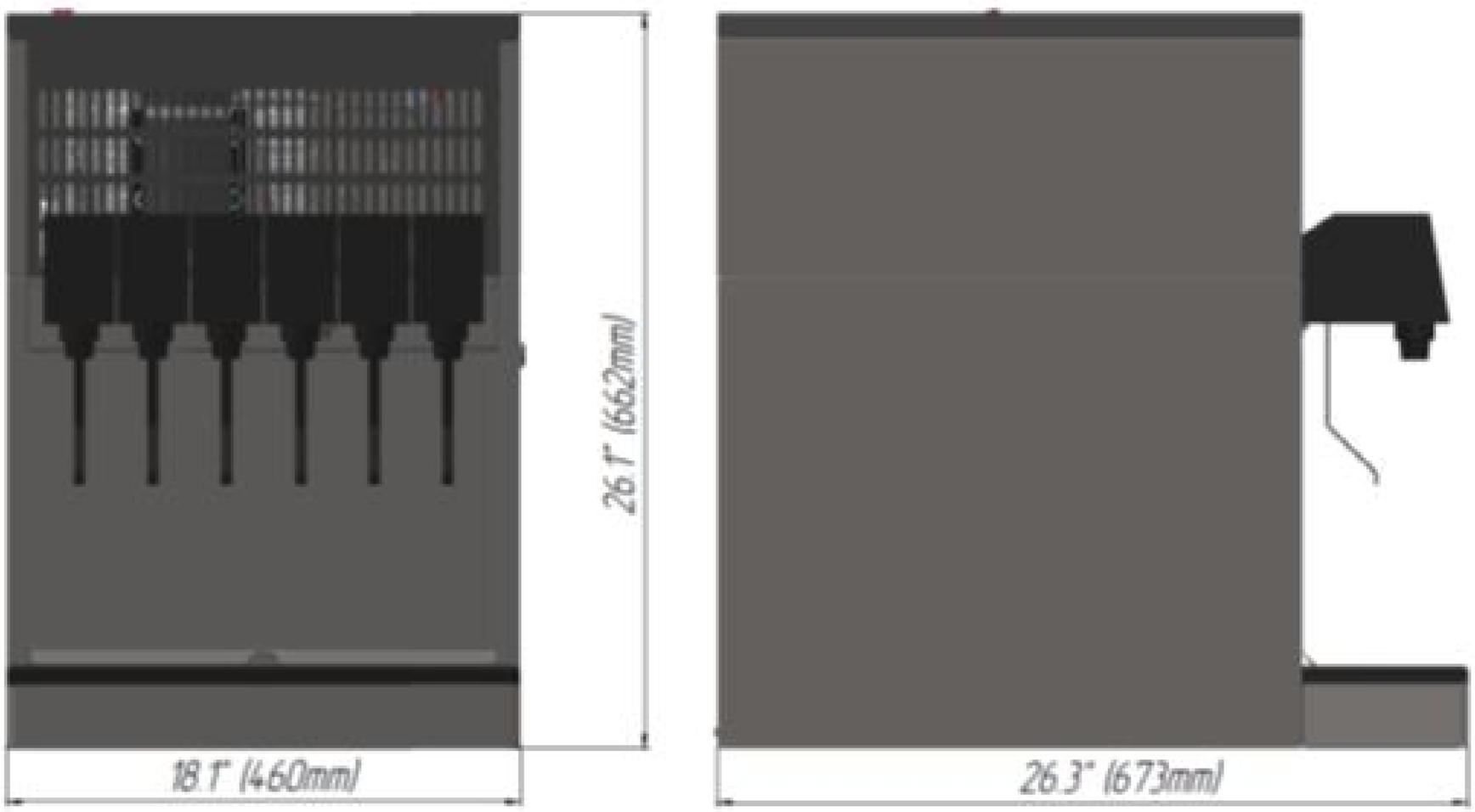

TOLL FREE: (866) 590 92 99

SALES@BEVERAGECRAFT.COM

BEVERAGE CRAFT Beer Equipment & Parts

CARBONATED BEVERAGE COOLING

CarboMix6 Plus

Specifications

TECHNICAL SPECIFICATION OF DISPENSER	CarboMix 6 Plus
NUMBER OF PRODUCT COILS, PCS	6
ICE TANK VOLUME	39 l (10.3 gal)
OPERATING AMBIENT TEMPERATURE	23.9-40.0 °C (75-105 °F)
PRODUCT OUTLET TEMPERATURE 1	1.4-3.5 °C (34.5-38.3 °F)
DRAW CAPACITY[1] 355 ML (12 OZ.), 2 CAP/MIN, FROM 24°C (75°F) TO 4,4°C (40°F)	68 caps
ICE BANK WEIGHT[1]	8-9 kg (17.6-19.8 lb)
CARBONATOR VOLUME (TOTAL/MAX/MIN)	1.65 l/1.05 l/0.88 l 0.44 gal/0.28 gal/0.23 gal
CARBONATOR PUMP	2.2 lpm (0.8 gpm)
ELECTRIC NETWORK	115 V, 60 Hz (24V at valves)
CURRENT	9.0 A
POWER	682 W
DIMENSIONS, MM	
WIDTH	460 mm (18.1")
DEPTH	673 mm (26.5")
HEIGHT	662 mm (26.1")
WEIGHT	68 kg 150 lb

TOLL FREE: (866) 590 92 99

SALES@BEVERAGECRAFT.COM

CARBONATED BEVERAGE COOLING

CarboMix6 Plus

Wiring diagram

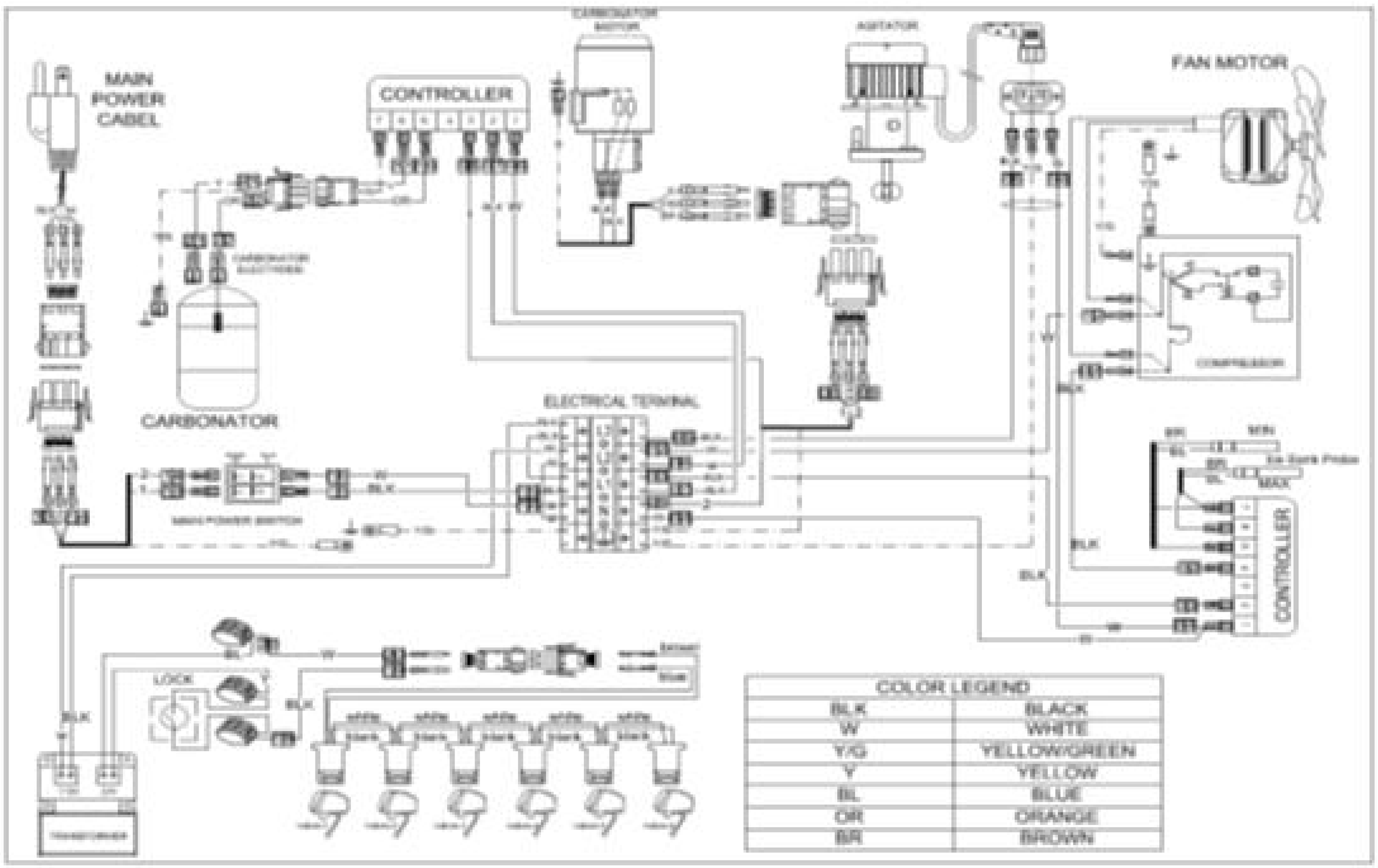

TOLL FREE: (866) 590 92 99

SALES@BEVERAGECRAFT.COM

BEVERAGE CRAFT Beer Equipment & Parts

CARBONATED BEVERAGE COOLING

CarboMix6 Plus

PARTS

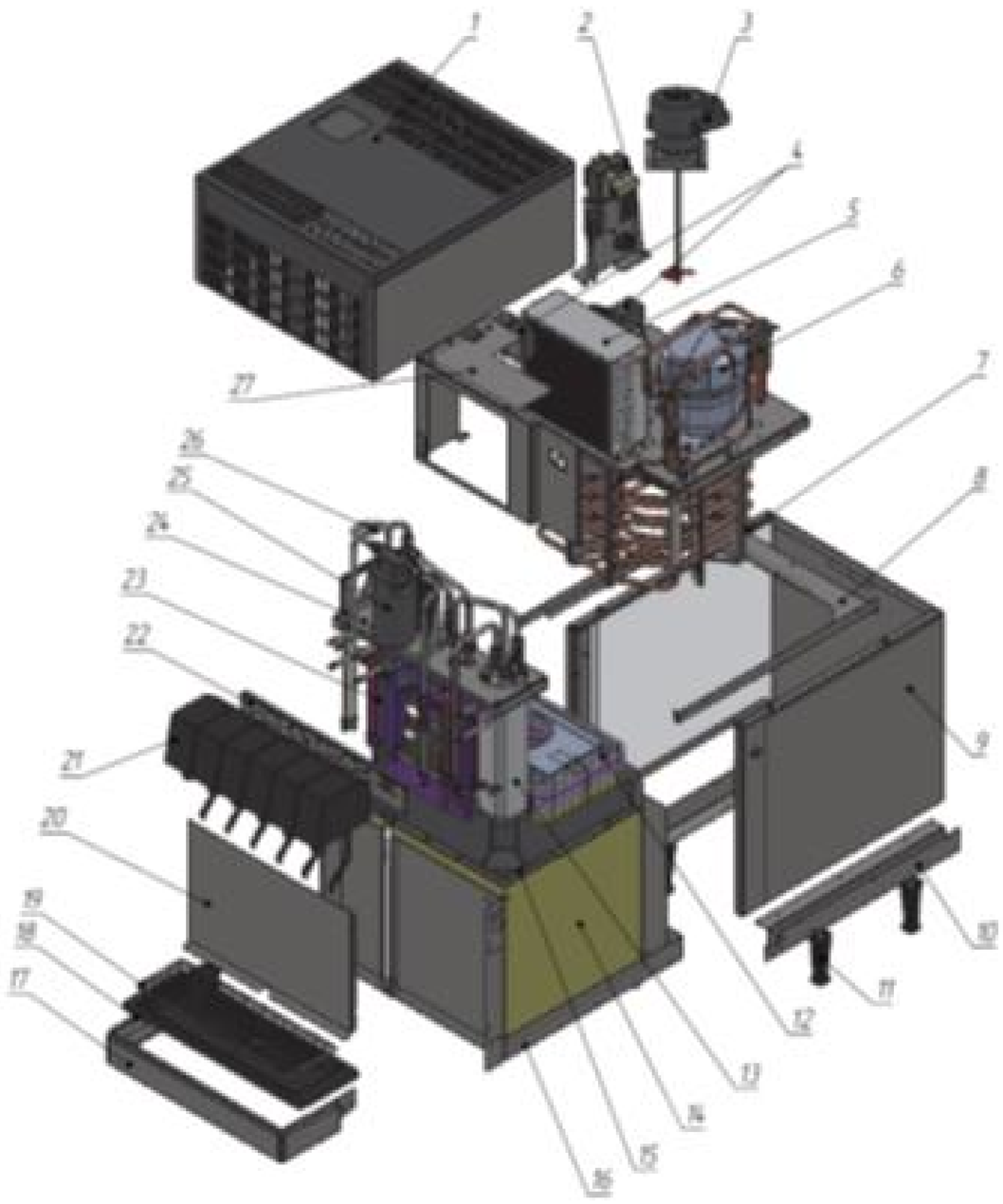

1	Bonnet Assy
2	Bracket with elements of control
3	Agitator Flojet TMA5
4	Controller
5	Condenser (copper-aluminum)
6	Compressor Embraco
7	Evaporator Assy Platform
8	Frame
9	Cabinet Assy
10	Leg Bracket Assy
11	Legs
12	Tube Assy, Water
13	Carbonator
14	Tank Insulation
15	Tank Assy
16	Plate, Bottom
17	Plastic bottom of the drip pan
18	Drip Tray
19	Cup Rest
20	Splash Plate
21	Lancer Post-Mix Valves (6 pieces)
22	Faucet Plate, 6 Valve
23	Tube Assy, Syrup
24	Platform
25	Carbonator Motor
26	Tube Assy
27	Panel with alarm elements